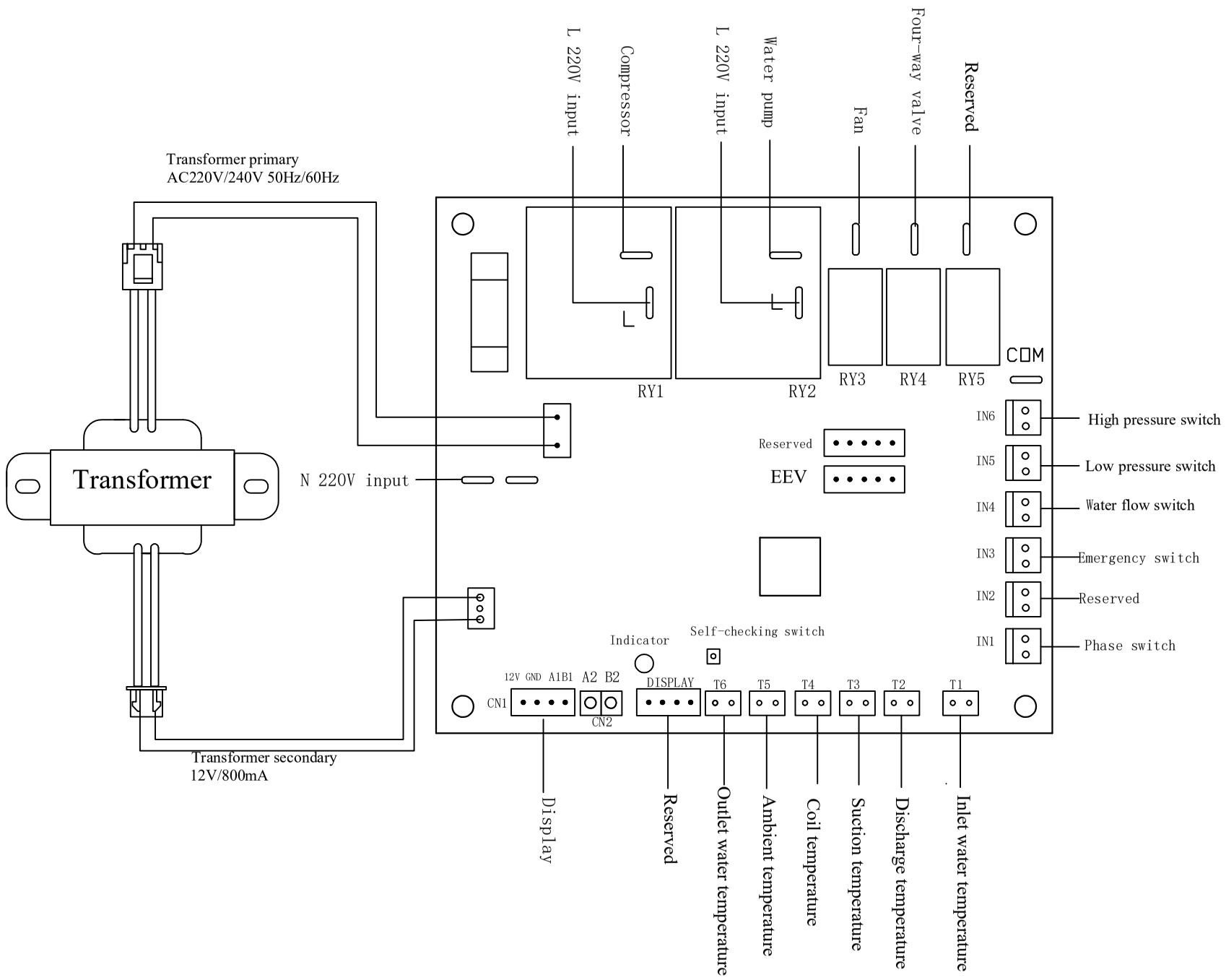Guangdong Chico Electronic Inc.	CC911A--Swimming pool heat pump Controller with Tuya WiFi function	Digram
No. CC/JS--2020-01-06--